167.0	0004	0016.0	1 of 1	Residential
Map	Block	Lot	CARD	ARLINGTON

	Total Card	/	Total Parcel
APPRAISED:	1,148,600	/	1,148,600
USE VALUE:	1,148,600	/	1,148,600
ASSESSED:	1,148,600	/	1,148,600

PROPERTY LOCATION

No	Alt No	Direction/Street/City
70	-72	HILLSIDE AVE, ARLINGTON

OWNERSHIP

Unit #:

Owner 1:	SPLAINE CAROL & DAVID
Owner 2:	
Owner 3:	
Street 1:	72 HILLSIDE AVE
Street 2:	
Twn/City:	ARLINGTON
St/Prov:	MA Cntry: Own Occ: Y
Postal:	02476 Type:

PREVIOUS OWNER

Owner 1:	
Owner 2:	
Street 1:	
Twn/City:	
St/Prov:	Cntry:
Postal:	

NARRATIVE DESCRIPTION

This parcel contains 10,172 Sq. Ft. of land mainly classified as Two Family with a Multi-Garden Building built about 1900, having primarily Vinyl Exterior and 4162 Square Feet, with 2 Units, 2 Baths, 1 3/4 Bath, 0 HalfBath, 14 Rooms, and 8 Bdrms.

OTHER ASSESSMENTS

Code	Descrip/No	Amount	Com. Int

PROPERTY FACTORS

Item	Code	Description	%	Item	Code	Description
Z	R1	SINGLE FA	100	water		
o				Sewer		
n				Electri		
Census:				Exmpt		
Flood Haz:						
D				Topo		
s				Street		
t				Gas:		

IN PROCESS APPRAISAL SUMMARY

Use Code	Land Size	Building Value	Yard Items	Land Value	Total Value
104	10172.000	640,500	500	507,600	1,148,600
Total Card	0.234	640,500	500	507,600	1,148,600
Total Parcel	0.234	640,500	500	507,600	1,148,600

Source: Market Adj Cost | Total Value per SQ unit /Card: 276.01 | /Parcel: 276.0

Legal Description

User Acct	GIS Ref	GIS Ref	Insp Date
110800			10/06/18

Entered Lot Size
Total Land:
Land Unit Type:

Patriot Properties Inc.

PREVIOUS ASSESSMENT

Parcel ID 167.0-0004-0016.0

!12948!

Tax Yr	Use	Cat	Bldg Value	Yrd Items	Land Size	Land Value	Total Value	Asses'd Value	Notes	Date
2020	104	FV	640,600	500	10,172.	507,600	1,148,700	1,148,700	Year End Roll	12/18/2019
2019	104	FV	495,400	600	10,172.	507,600	1,003,600	1,003,600	Year End Roll	1/3/2019
2018	104	FV	494,800	0	10,172.	449,600	944,400	944,400	Year End Roll	12/20/2017
2017	104	FV	464,100	0	10,172.	377,100	841,200	841,200	Year End Roll	1/3/2017
2016	104	FV	464,100	0	10,172.	377,100	841,200	841,200	Year End	1/4/2016
2015	104	FV	413,600	0	10,172.	326,300	739,900	739,900	Year End Roll	12/11/2014
2014	104	FV	413,600	0	10,172.	315,400	729,000	729,000	Year End Roll	12/16/2013
2013	104	FV	430,400	0	10,172.	300,200	730,600	730,600		12/13/2012

PRINT

Date	Time
12/11/20	02:58:01

LAST REV

Date	Time
12/27/19	08:12:18
apro	

PAT ACCT. 12948

USER DEFINED

Prior Id # 1:	110800
Prior Id # 2:	
Prior Id # 3:	
Prior Id # 1:	
Prior Id # 2:	
Prior Id # 3:	
Prior Id # 1:	
Prior Id # 2:	
Prior Id # 3:	
ASR Map:	
Fact Dist:	
Reval Dist:	
Year:	
LandReason:	
BldReason:	
CivilDistrict:	
Ratio:	

SALES INFORMATION

TAX DISTRICT

Grantor	Legal Ref	Type	Date	Sale Code	Sale Price	V	Tst	Verif	Notes
	26907-51		12/16/1996		210,000	No	No		A

BUILDING PERMITS

Date	Number	Descrip	Amount	C/O	Last Visit	Fed Code	F. Descrip	Comment
9/10/2019	1401	New Wind	15,000					
9/7/2006	748	Siding	29,422			G8	GR FY08	
5/30/2003	404	Redo Kit	20,000					redo bath also
9/6/2002	738	Wood Dec	150,000					
8/30/2001	602	Re-Roof	13,000					
9/11/1995	525	Manual	1,000					FILL IN POOL

ACTIVITY INFORMATION

Date	Result	By	Name
10/6/2018	MEAS&NOTICE	HS	Hanne S
3/10/2009	Missed Appt.	163	PATRIOT
1/5/2009	Measured	189	PATRIOT
3/15/2007	External Ins	BR	B Rossignol
7/11/2005	Permit Visit	BR	B Rossignol
1/15/2000	Inspected	264	PATRIOT
12/13/1999	Mailer Sent		
12/7/1999	Measured	197	PATRIOT
7/16/1993		EK	

Sign: VERIFICATION OF VISIT NOT DATA ___/___/___

LAND SECTION (First 7 lines only)

Use Code	Description	LUC Fact	No of Units	Depth / PriceUnits	Unit Type	Land Type	LT Factor	Base Value	Unit Price	Adj	Neigh	Neigh Influ	Neigh Mod	Infl 1	%	Infl 2	%	Infl 3	%	Appraised Value	Alt Class	%	Spec Land	J Code	Fact	Use Value	Notes
104	Two Family		10172		Sq. Ft.	Site		0	70.	0.71	8									507,613						507,600	

Total AC/HA:	0.23352	Total SF/SM:	10172	Parcel LUC:	104	Two Family	Prime NB Desc:	ARLINGTON	Total:	507,613	Spl Credit		Total:	507,600

EXTERIOR INFORMATION

Type:	13 - Multi-Garden		
Sty Ht:	2H - 2 & 1/2 Sty		
(Liv) Units:	2	Total:	2
Foundation:	3 - BrickorStone		
Frame:	1 - Wood		
Prime Wall:	4 - Vinyl		
Sec Wall:			%
Roof Struct:	1 - Gable		
Roof Cover:	1 - Asphalt Shgl		
Color:	BEIGE		
View / Desir:			

BATH FEATURES

Full Bath	1	Rating:	Average
A Bath:	1	Rating:	Very Good
3/4 Bath:	1	Rating:	Average
A 3QBth		Rating:	
1/2 Bath:		Rating:	
A HBth:		Rating:	
OthrFix:		Rating:	

OTHER FEATURES

Kits:	1	Rating:	Average
A Kits:	1	Rating:	Very Good
Frpl:	2	Rating:	Average
WSFlue:		Rating:	

COMMENTS

SKETCH

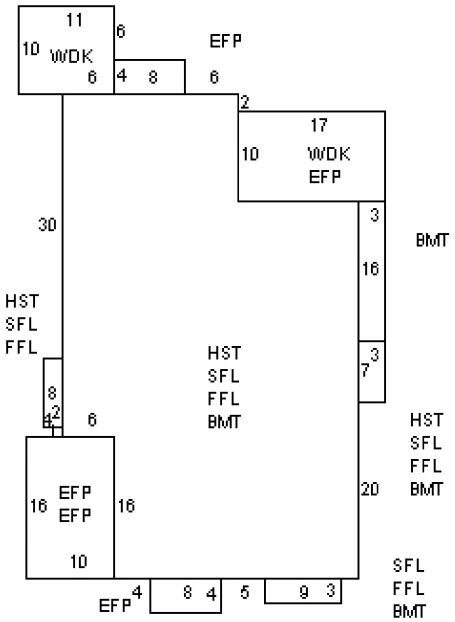

GENERAL INFORMATION

Grade:	C - Average		
Year Blt:	1900	Eff Yr Blt:	
Alt LUC:		Alt %:	
Jurisdict:	G6	Fact:	.
Const Mod:			
Lump Sum Adj:			

CONDO INFORMATION

Location:	
Total Units:	
Floor:	
% Own:	
Name:	

RESIDENTIAL GRID

1st Res Grid	Desc:	Line 1	# Units:	1

Level	FY	LR	DR	D	K	FR	RR	BR	FB	HB	L	O
Other												
Upper												
Lvl 2												
Lvl 1												
Lower												
Totals	RMs:	14	BRs:	8	Baths:	1	HB					

INTERIOR INFORMATION

Avg Ht/FL:	STD		
Prim Int Wall	2 - Plaster		
Sec Int Wall:			%
Partition:	T - Typical		
Prim Floors:	3 - Hardwood		
Sec Floors:			%
Bsmnt Flr:	12 - Concrete		
Subfloor:			
Bsmnt Gar:			
Electric:	3 - Typical		
Insulation:	2 - Typical		
Int vs Ext:	S		
Heat Fuel:	1 - Oil		
Heat Type:	5 - Steam		
# Heat Sys:	2		
% Heated:	100	% AC:	
Solar HW:	NO	Central Vac:	NO
% Com Wall		% Sprinkled:	

DEPRECIATION

Phys Cond:	AG - Avg-Good	26.	%
Functional:			%
Economic:			%
Special:			%
Override:			%
	Total:	26.4	%

REMODELING

Exterior:	
Interior:	
Additions:	
Kitchen:	2003
Baths:	
Plumbing:	
Electric:	
Heating:	
General:	

RES BREAKDOWN

No Unit	RMS	BRS	FL
1	8	4	
1	6	4	
Totals			
2	14	8	

CALC SUMMARY

Basic $ / SQ:	170.00
Size Adj.:	0.90231287
Const Adj.:	0.98990101
Adj $ / SQ:	151.844
Other Features:	140500
Grade Factor:	1.00
NBHD Inf:	1.00000000
NBHD Mod:	
LUC Factor:	1.00
Adj Total:	870209
Depreciation:	229735
Depreciated Total:	640474

COMPARABLE SALES

Rate	Parcel ID	Typ	Date	Sale Price

WtAv$/SQ:		AvRate:		Ind.Val	

Juris. Factor:	1.00	Before Depr:	151.84
Special Features:	0	Val/Su Net:	95.63
Final Total:	640500	Val/Su SzAd	153.91

SUB AREA

Code	Description	Area - SQ	Rate - AV	Undepr Value
BMT	Basement	1,702	45.550	77,532
FFL	First Floor	1,670	151.840	253,580
SFL	Second Floor	1,670	151.840	253,580
HST	Half Story	822	151.840	124,740
EFP	Enclos Porch	554	31.810	17,625
WDK	Deck	280	9.470	2,653

Net Sketched Area:	6,698			Total:	729,710
Size Ad	4161.5	Gross Are	7519	FinArea	4162

SUB AREA DETAIL

Sub Area	% Usbl	Descrip	% Type	Qu	# Ten

IMAGE

AssessPro Patriot Properties, Inc

MOBILE HOME

Make:		Model:		Serial #:		Year:		Color:	

PARCEL ID

167.0-0004-0016.0

SPEC FEATURES/YARD ITEMS

Code	Description	A	Y/S	Qty	Size/Dim	Qual	Con	Year	Unit Price	D/S	Dep	LUC	Fact	NB Fa	Appr Value	JCod	JFact	Juris. Value
19	Patio	D	Y	1	10X12	A	AV	2000	5.38	T	15.2	104			500			500

More:	N	Total Yard Items:	500	Total Special Featues:	
				Total:	500